# TL30BBGYRXNXQD
# LED Signal Light – Tower Light

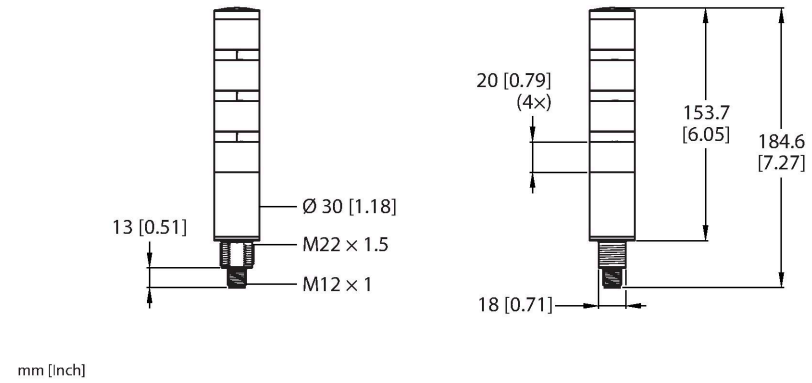

## Technical data

| | |
|---|---|
| Type | TL30BBGYRXNXQD |
| ID | 3805385 |
| **Signal and display data** | |
| Purpose | LED indicator light |
| Function | Tower light |
| Light type | White<br>Blue<br>Green<br>Yellow<br>Red |
| Dimmable | No |
| Features of color 1 | Blue, Permanently on, 2 lm |
| Features of color 2 | Green, 7.5 lm |
| Features of color 3 | Yellow, 6.5 lm |
| Features of color 4 | Red, 2.5 lm |
| **Electrical data** | |
| Operating voltage $U_B$ | 12…30 VDC |
| Max. current consumption per color | 40 mA |
| Input type | Bipolar (PNP/NPN) |
| Response time typical | < 1 ms |
| **Mechanical data** | |
| Cascadable | No |
| Design | Smooth barrel, TL30B |
| Dimensions | Ø 30 x 184.7 mm |
| Housing material | Plastic, PC, Black |
| Window material | Polycarbonate, diffuse |
| Electrical connection | Connector, M12 × 1 |
| Number of cores | 5 |

## Features

- Compact plastic housing, black
- Protection class IP65
- Mechanical screw-in thread, M22 × 1.5
- M12 × 1 male connector
- Colors: Blue (COL 1) / Green (COL 2) / Yellow (COL 3) / Red (COL 4)
- Operating voltage: 12…30 VDC
- PNP or NPN input circuit, 5-pin, depending on wiring

## Functional principle

The rugged multifunction TL30 base is available in many variations and is easily mounted. Each signal tower can be assembled with two to five varicolored LEDs, with or without a beeper. Clearly visible status displays for indoor and outdoor applications. The wiring diagram shows a PNP pin assignment.
5 colors are available, blue (B), green (G), red (R), yellow (Y) and white (W), which specify the light sequence from bottom to top in the type designation of the tower light. Example: TL30BGYRXXNXQDQ designates the colors green, yellow and red from bottom to top.

TL30BBGYRXNXQD| 04-03-2025 13-00 | Technical modifications reserved

## Technical data

| | |
|---|---|
| Ambient temperature | -40…+50 °C |
| Storage temperature | -40…+70 °C |
| Relative humidity | 0…90 % |
| Protection class | IP65 |
| **Tests/approvals** | |
| Approvals | CE, cULus |

## Accessories

| SMB22RAVK | 3078614 |
|---|---|

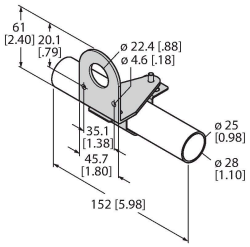


Mounting bracket, rectangular, stainless steel, for sensors with 22 mm thread, for round bars Ø 28 mm

| SMB22FVK | 3078615 |
|---|---|

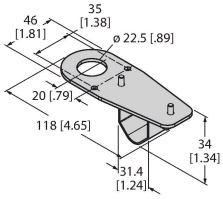


Mounting bracket, stainless steel, for sensors with 22 mm thread, for cylinders Ø 28 mm

| SMB22A | 3079414 |
|---|---|

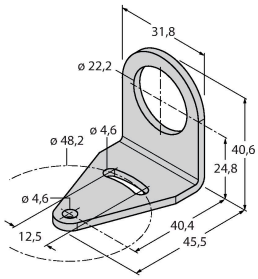


Mounting bracket, stainless steel, for K30L series

## Accessories

| Dimension drawing | Type | ID | |
|---|---|---|---|
| | RKC4.5T-2/TEL | 6625016 | Connection cable, M12 female connector, straight, 5-pin, cable length: 2 m, jacket material: PVC, black; cULus approval |
| 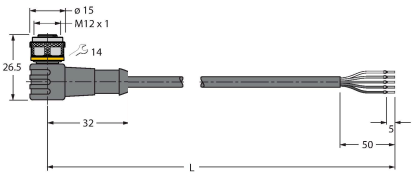 | WKC4.5T-2/TEL | 6625028 | Connection cable, M12 female connector, angled, 5-pin, cable length: 2 m, jacket material: PVC, black; cULus approval |

TL30BBGYRXNXQD| 04-03-2025 13-00 | Technical modifications reserved