Inductive Sensor (Axial)
Monitoring Kit for Power Clamps
NI1.5-KS13A-2AP6X3-0.2-RS4.4T/S34

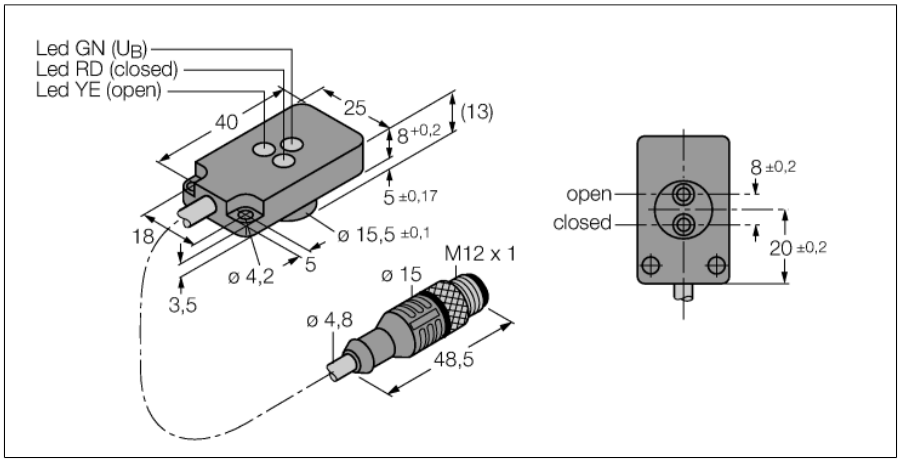

- Compact power clamp monitoring KS13A with two sensors and LEDs
- Active face, axial
- Plastic, PBT-GF20-V0, yellow
- Mounting holes with stainless steel sleeves
- Cable: Irradiation crosslinked PUR
- Resistant to magnetic fields (weld-resistant), for DC and AC fields up to 100 mT
- 2 x NO contact, PNP output
- DC 4-wire, 10…30 VDC

Wiring Diagram

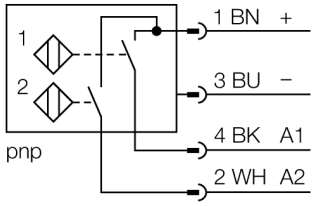

Functional principle

Inductive sensors detect metal objects contactless and wear-free. For this, they use a high-frequency electromagnetic AC field that interacts with the target. Inductive sensors generate this field via an RLC circuit with a ferrite coil.

Type	NI1.5-KS13A-2AP6X3-0.2-RS4.4T/S34
ID	4430120

Special version	S34 Corresponds to:Resistant to magnetic fields

General data	
Rated switching distance Sn	1.5 mm
Mounting conditions	Non-flush
Secured operating distance	≤ (0.81 × Sn) mm
Correction factors	St37 = 1; Al = 0.3; stainless steel = 0.7; Ms = 0.4
Repeat accuracy	≤ 2 % of full scale
Temperature drift	≤ ±10 %
Hysteresis	3…15 %

Electrical data	
Operating voltage U_B	10…30 VDC
Ripple U_{ss}	≤ 10 % U_{Bmax}
DC rated operating current I_e	≤ 150 mA
Residual current	≤ 0.1 mA
Isolation test voltage	0.5 kV
Short-circuit protection	yes/Cyclic
Voltage drop at I_e	≤ 1.5 V
Output function	4-wire, NO contact, PNP
Switching frequency	0.5 kHz

Mechanical data	
Design	Monitoring Kit for Spanners, KS13
Dimensions	40 x 25 x 13 mm
Housing material	Plastic, PBT-GF20-V0
Active area material	Plastic, PBT
Electrical connection	Connector, M12 × 1
Cable quality	Ø 4.8 mm, Orange, D12YSL11X-OB, PUR, 0.2 m
Core cross-section	4 x 0.34 mm^2

Edition • 2025-02-26T13:56:26+01:00

Environmental conditions	
Ambient temperature	-25…+70 °C
Vibration resistance	55 Hz (1 mm)
Shock resistance	30 g (11 ms)
Protection class	IP67
MTTF	2283 years acc. to SN 29500 (Ed. 99) 40 °C

Power-on indication	LED, Green
Switching state	2 × LEDs, Yellow/red

Edition • 2025-02-26T13:56:26+01:00